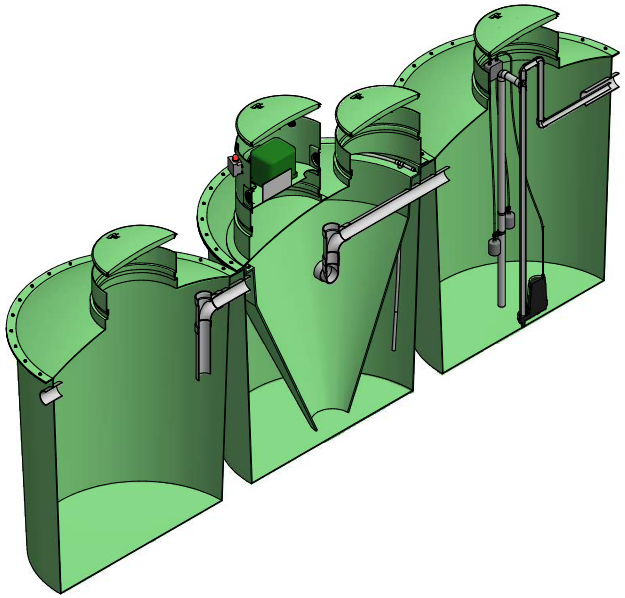

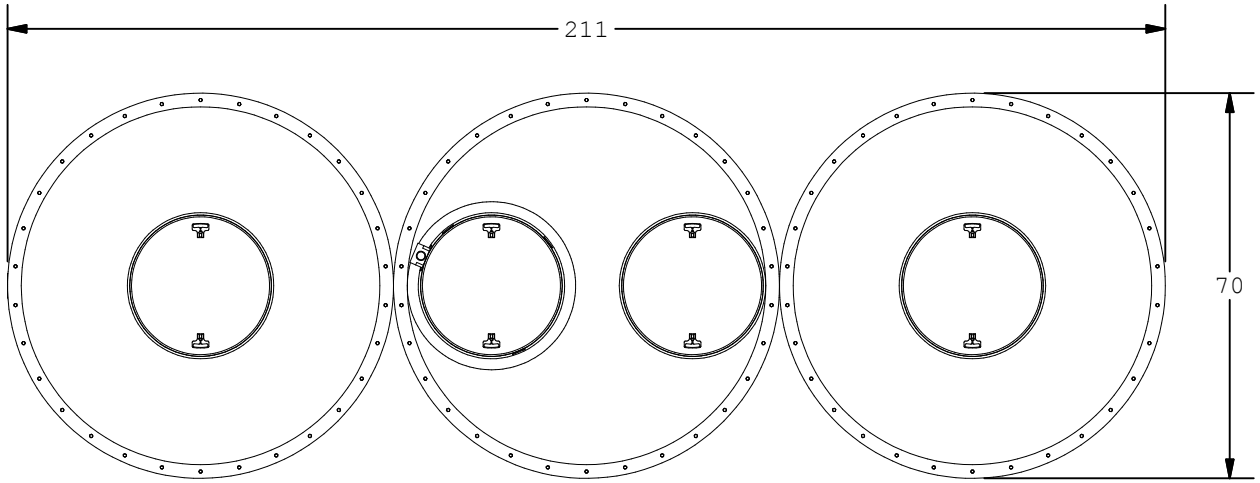

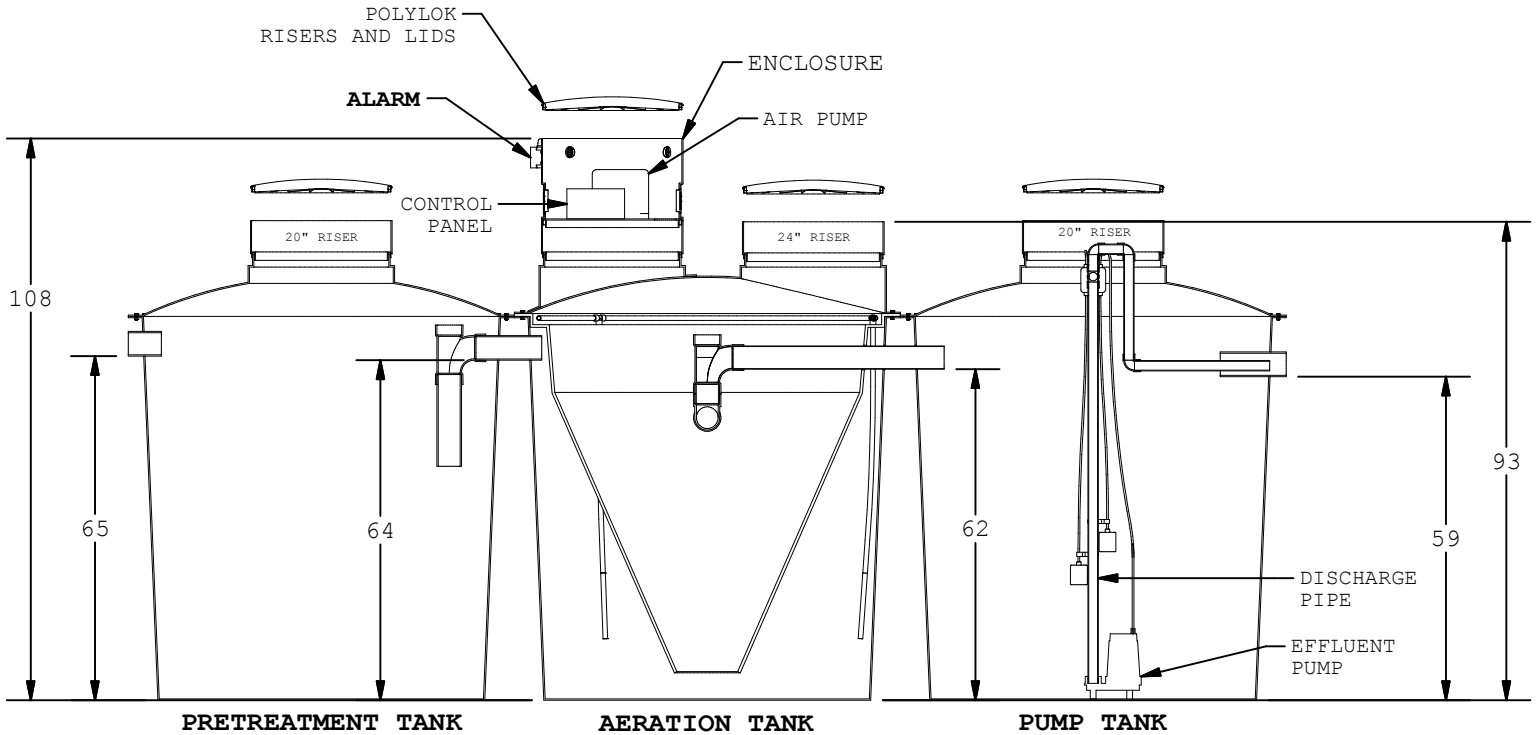

hydro-action
green from the ground up

WASTEWATER SOLUTIONS

PART DESCRIPTION:	TOLERANCES UNLESS OTHERWISE SPECIFIED	REV #:1	SCALE:	DATE:	DRAWN BY:	SHEET #:
AP SERIES	FRACTIONS ±1/2" | ANGLES ±1°	DIMENSIONS ARE IN INCHES UNLESS OTHERWISE SPECIFIED	1 / 35	9/12/2017	Israel Debro	1 OF 1
				PART #:	AP-500/85+85	