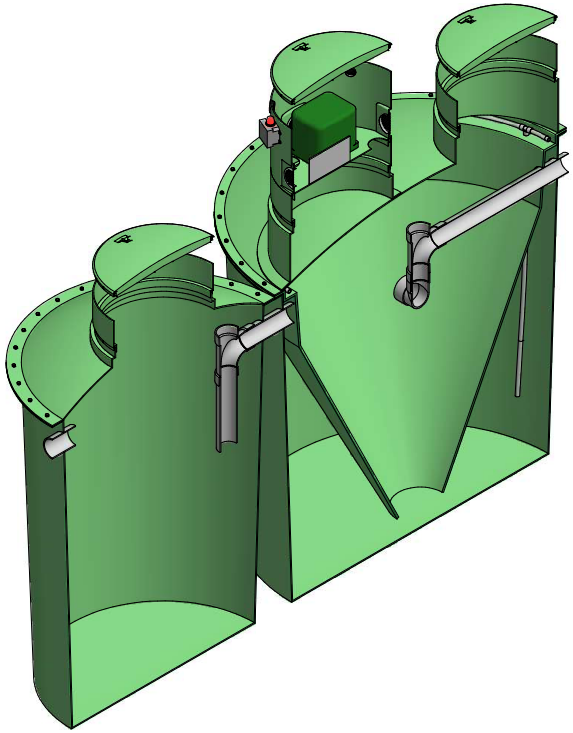

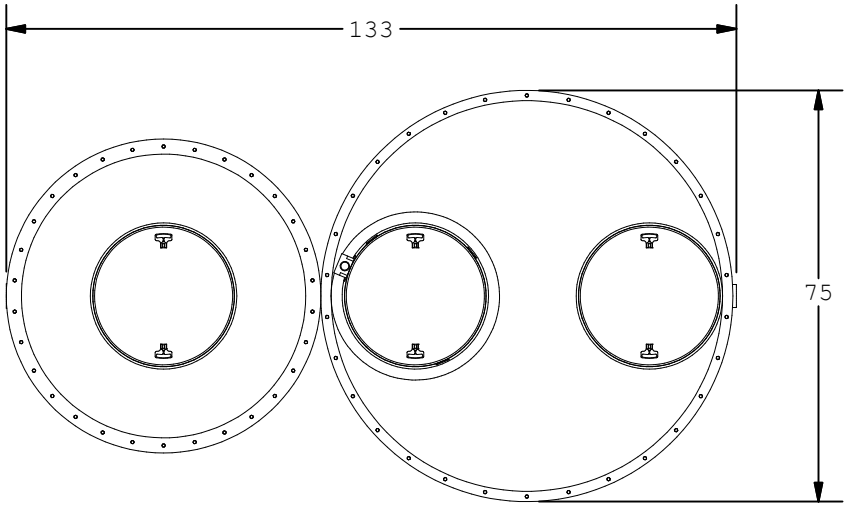

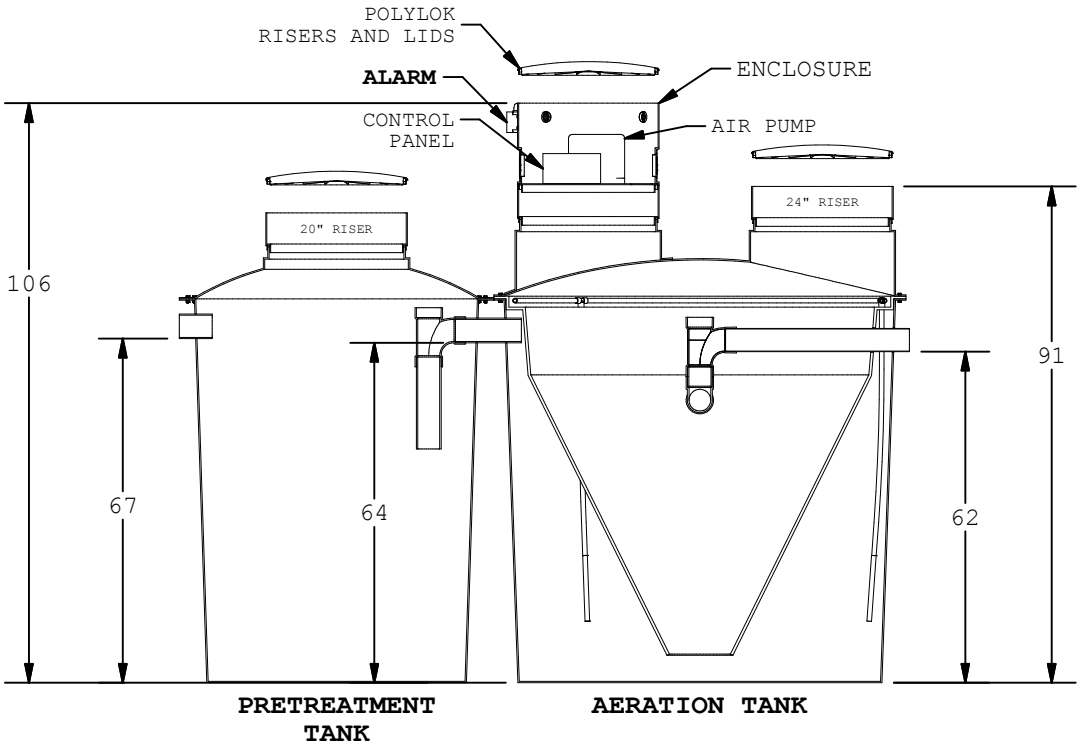

hydro action
green from the ground up

WASTEWATER
SOLUTIONS

PART DESCRIPTION:	TOLERANCES UNLESS OTHERWISE SPECIFIED	REV #:	SCALE:	DATE:	DRAWN BY:	SHEET #:
AP SERIES	FRACTIONS ±1/2" | ANGLES ±1°		1 / 35	9/13/2017	Israel Debro	1 OF 1
	DIMENSIONS ARE IN INCHES UNLESS OTHERWISE SPECIFIED			PART #:	AP-600/+5 PRE	