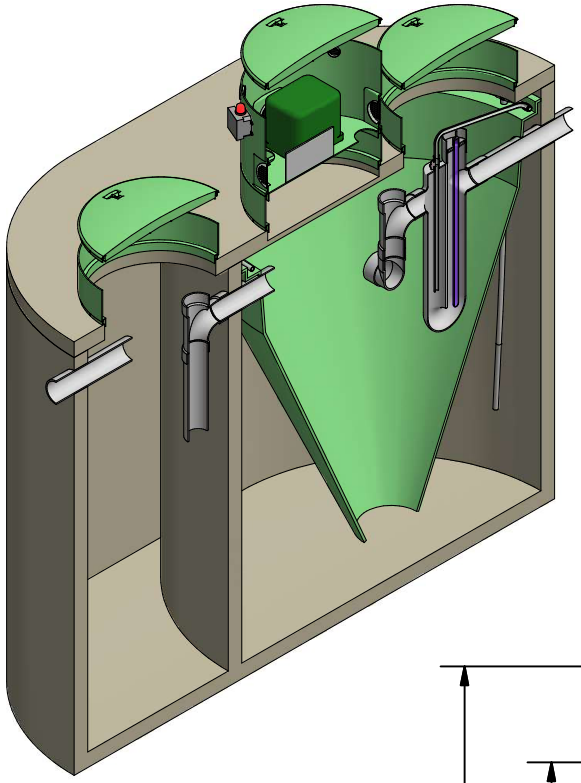

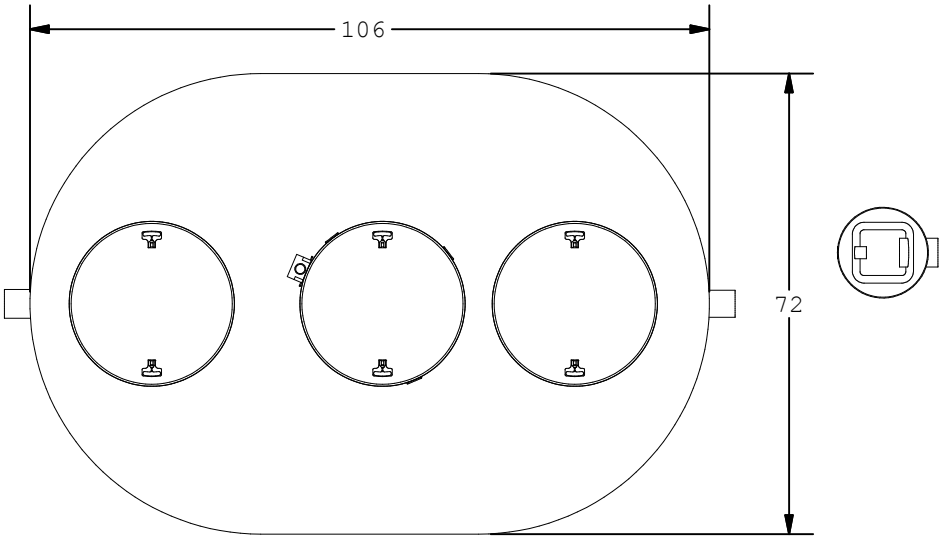

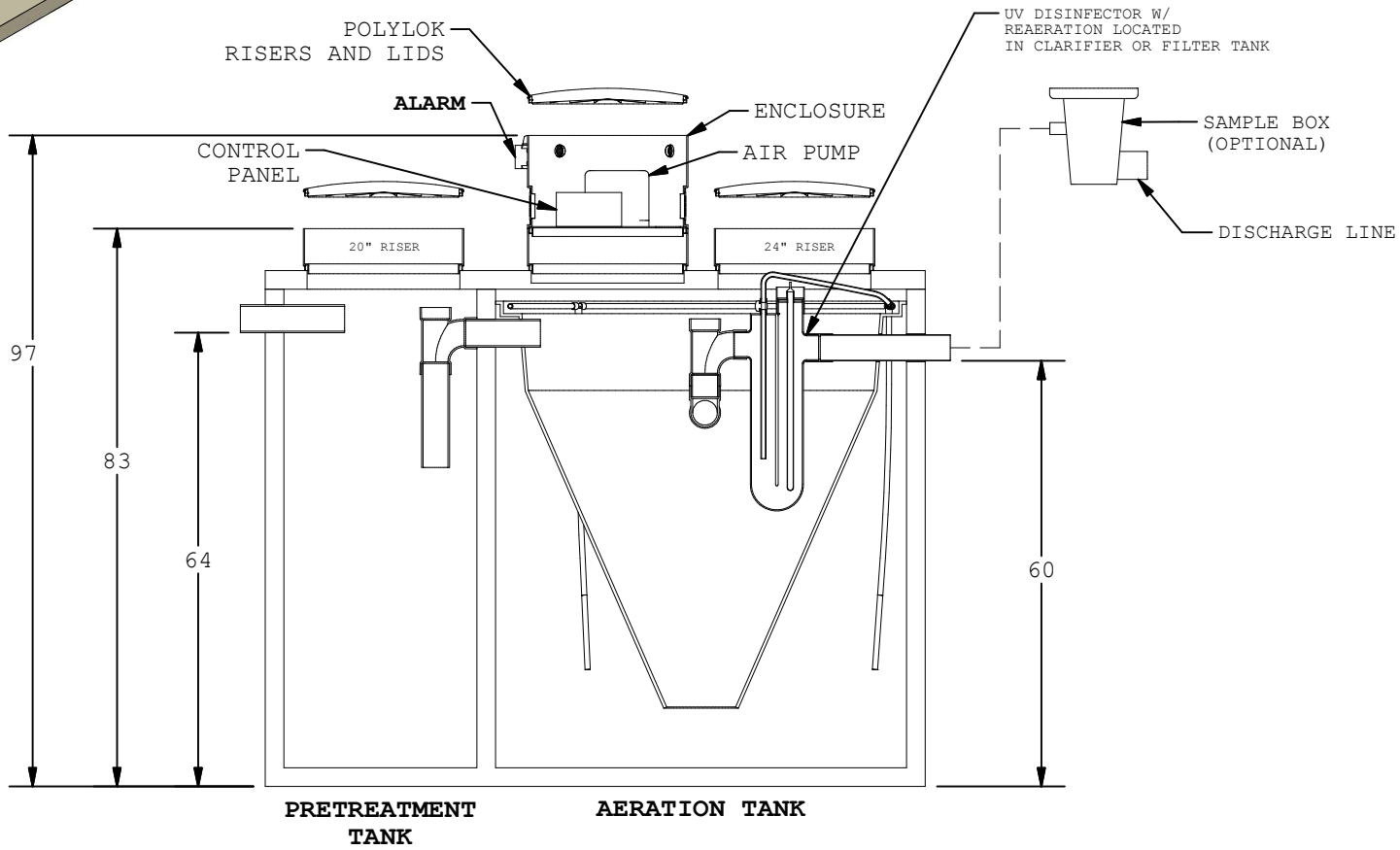

hydro action
green from the ground up

WASTEWATER
SOLUTIONS

PART DESCRIPTION:	TOLERANCES UNLESS OTHERWISE SPECIFIED	REV #:	SCALE:	DATE:	DRAWN BY:	SHEET #:
CLP 500-600 SERIES UV DISINFECTION	FRACTIONS ±1/2" | ANGLES ±1°	7/23/20	1 / 30	9/10/2017	Israel Debro	1 OF 1
		DIMENSIONS ARE IN INCHES UNLESS OTHERWISE SPECIFIED		PART #: CLP-500-600/+5 PRE NPDES		